SPEED 3100 log

Installation and Operation Manual

English 2
Français 16
Español 29
Português 42

NAVMAN

www.navman.com

NavBus

FCC Statement

Note: This equipment has been tested and found to comply with the limits for a Class B digital device, pursuant to Part 15 of the FCC Rules. These limits are designed to provide reasonable protection against harmful interference in a normal installation. This equipment generates, uses and can radiate radio frequency energy and, if not installed and used in accordance with the instructions, may cause harmful interference to radio communications. However, there is no guarantee that interference will not occur in a particular installation. If this equipment does cause harmful interference to radio or television reception, which can be determined by turning the equipment off and on, the user is encouraged to try to correct the interference by one or more of the following measures:

- Reorient or relocate the receiving antenna
- Increase the separation between the equipment and receiver
- Connect the equipment into an output on a circuit different from that to which the receiver is connected
- Consult the dealer or an experienced technician for help
- A shielded cable must be used when connecting a peripheral to the serial ports.

Contents

1 Introduction 4
2 Operation 5
2-1 Turn on and off 5
2-2 Basic operation 5
2-3 Change units 5
2-4 Simulate mode 5
2-5 Key reference 6
3 Speed, average speed, maximum speed, trim speed 7
3-1 Set speed and log units 7
3-2 Reset average speed 7
3-3 Reset maximum speed 7
3-4 Reset trim speed 7
3-5 Set speed damping 7
3-6 Set speed resolution 7
3-7 Calibrate speed 8
4 Log and total log 8
4-1 Reset log 8
4-2 Reset total log 8
5 Temperature 9
5-1 Set temperature units 9
5-2 Calibrate temperature 9
6 Countdown timer 9
6-1 Start countdown timer 9
6-2 Stop and reset countdown timer 9
6-3 Adjust start time 9
7 Systems of several instruments 10
7-1 NavBus 10
7-2 NMEA 10
8 SPEED 3100 hardware 11
8-1 What comes with your SPEED 3100 11
8-2 Other parts required 11
8-3 Transducers 11
8-4 Accessories 11
9 Installation and setup 12
9-1 Installation 12
9-2 Setup 13
9-3 Resetting to factory defaults 14
Appendix A - Specifications 14
Appendix B - Troubleshooting 15
Appendix C - How to contact us 55

Units

The factory default units are °C, knots and nautical miles. To change these units, please refer to section 2-3 of this manual.

1 Introduction

The SPEED 3100 measures and displays boat speed and water temperature. It can calculate and display average speed, maximum speed, trim speed, trip log (distance) and total log.

An installed SPEED 3100 usually has two parts:

- The display unit.
- A speed / temperature transducer which is attached to the hull and wired to the display unit.

The unit is powered from the boat's power supply.

The SPEED 3100 is part of the NAVMAN family of instruments for boats, which includes instruments for speed, depth, wind and repeaters. These instruments can be connected together to form an integrated data system for a boat (see section 7).

For maximum benefit, please read this manual carefully before installation and use.

How the transducer measures speed

The speed transducer has a small paddlewheel which spins as the boat moves through the water. The transducer measures how fast the paddlewheel is spinning and calculates the boat speed by averaging several measurements.

Cleaning and maintenance

Clean the display unit and the plastic transducer with a damp cloth or mild detergent. Avoid abrasive cleaners, petrol or other solvents.

When repainting the hull, cover or remove any visible transducer. Do not use a high pressure water blast on the speed transducer paddlewheel as it may damage the bearings.

The SPEED 3100 display unit

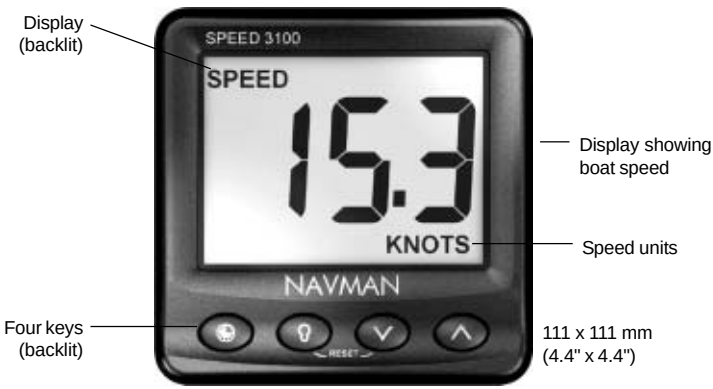

Important

It is the owner's sole responsibility to install and use the instrument and transducer/s in a manner that will not cause accidents, personal injury or property damage. The user of this product is solely responsible for observing safe boating practices.

NAVMAN NZ LIMITED DISCLAIMS ALL LIABILITY FOR ANY USE OF THIS PRODUCT IN A WAY THAT MAY CAUSE ACCIDENTS, DAMAGE OR THAT MAY VIOLATE THE LAW.

This manual represents the SPEED 3100 as at the time of printing. Navman NZ Limited reserves the right to make changes to specifications without notice.

Governing Language: This statement, any instruction manuals, user guides and other information relating to the product (Documentation) may be translated to, or has been translated from, another language (Translation). In the event of any conflict between any Translation of the Documentation, the English language version of the Documentation will be the official version of the Documentation.

Copyright © 2002 Navman NZ Limited, New Zealand. All rights reserved. NAVMAN is a registered trademark of Navman NZ Limited.

2 Operation

2-1 Turn on and off

Turn the unit on and off with the auxiliary power switch on the boat. The unit does not have its own power switch. When you turn it off, any settings you have made are retained.

If the word SIMULATE flashes at the top, left of the display, then the unit is in simulate mode (see section 2-4).

2-2 Basic operation

The keys

The unit has four keys, labelled ◔ ☼ ∨ and ∧. In this manual:

- **Press** means to push the key for less than one second
- **Hold** for two seconds means to hold the key down for two seconds or more
- **Press one key + another key** means to push both keys together.

Set backlight for screen and keys

You can set the backlight to one of four brightness levels or off. Press ☼ once to display the current backlight level, press ☼ again to change the level:

Backlight level 2

Change the item displayed

The display shows one item at a time. To change what is displayed, press ∨ or ∧ one or more times. The choices are:

- Speed.
- Avg speed.
- Max speed.
- Trim speed.
- Temperature.
- Trip log (distance).
- Total log (distance).
- Battery voltage.

To use the timer, press ◔ (see section 6).

2-3 Change units

- To change the speed and log units, press ∨ or ∧ until SPEED is displayed, then hold ∧ until the units change; if necessary, hold ∧ again until the units change again.
- To change the temperature units, press ∨ or ∧ until the temperature is displayed, then hold ∧ until the units change.

2-4 Simulate mode

Simulate mode allows you to become familiar with the unit off the water. In Simulate mode, the SPEED 3100 functions normally except that the transducer is ignored and the unit generates this data internally. The word SIMULATE flashes at the top, left corner of the screen.

To turn Simulate mode on or off:

1 Turn the power off.

2 Hold down ◔ while you turn the power on.

2-5 Key reference

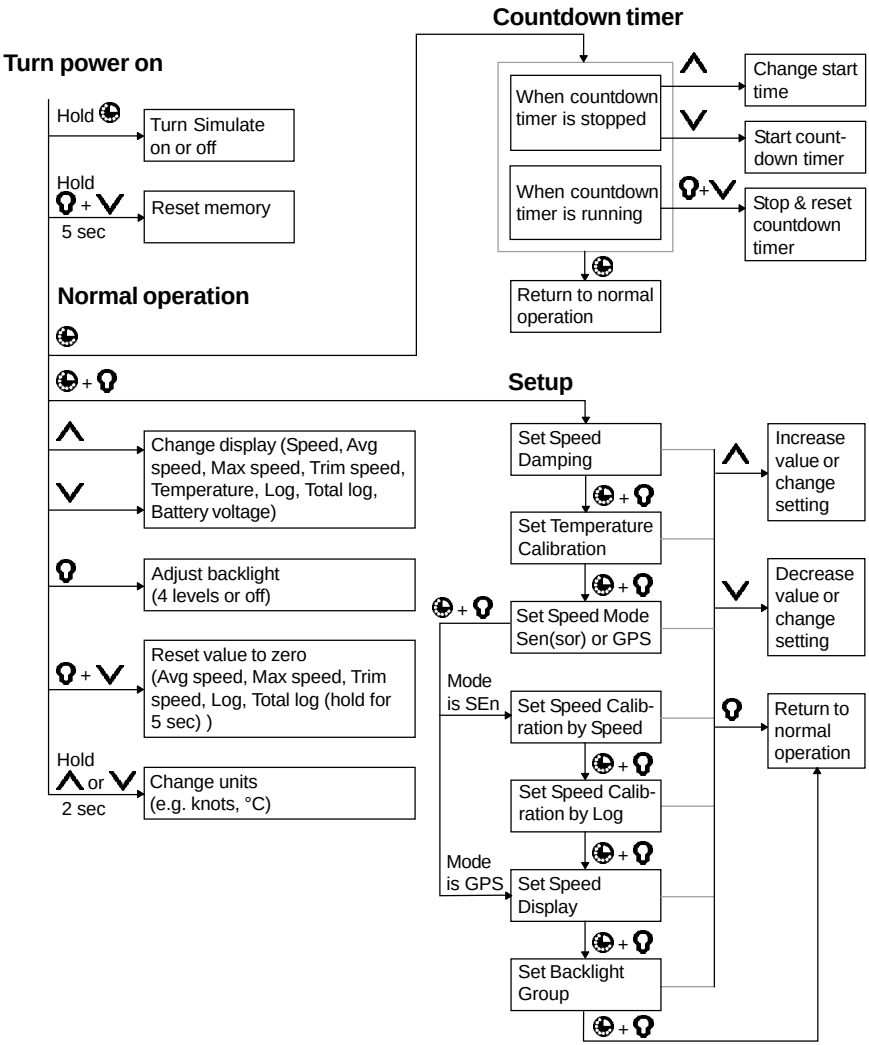

3 Speed, average speed, maximum speed, trim speed

The unit can display several speeds:

- **SPEED**: The current boat speed.
- **AVG SPEED**: The average speed since AVG SPEED was reset or the unit was switched on.
- **MAX SPEED**: The maximum speed since MAX SPEED was reset or the unit was switched on.
- **TRIM SPEED**: Trim speed may be used for tuning racing boats. Trim speed measures changes in boat speed, relative to when you reset trim speed to zero. For example, if the boat is travelling at 10 knots and you reset trim speed, then trim speed is zero. Then:
  - If the boat speed increases to 11.5 knots, the trim speed is 1.5 knots.
  - If the boat speed decreases to 8.5 knots, the trim speed is -1.5 knots.

3-1 Set speed and log units

The speed units can be selected to be KNOTS, KPH and MPH. Selecting one of these automatically sets the log distance units to NM, KM or M (miles):

- Press ⋁ or ⋀ until SPEED is displayed, then hold ⋀ until the units change; if necessary, hold ⋀ again until the units change again.

3-2 Reset average speed

Resetting starts calculating a new average speed:

1 Press ⋁ or ⋀ until AVG SPEED is displayed.
2 Press ☊ + ⋁.

3-3 Reset maximum speed

Resetting starts calculating a new maximum:

1 Press ⋁ or ⋀ until MAX SPEED is displayed.
2 Press ☊ + ⋁.

3-4 Reset trim speed

Resetting sets the trim speed to zero:

1 Press ⋀ until TRIM SPEED is displayed.
2 Press ☊ + ⋁.

3-5 Set speed damping

Waves and wind cause the boat speed to fluctuate slightly. To give a stable reading, the SPEED 3100 calculates the boat speed and trim speed by measuring the speed several times and averaging the measurements. The speed damping value ranges from 1 to 5:

- A lower value averages readings over a shorter period of time. This gives the most accurate speed but has the most fluctuations.
- A higher value averages readings over a longer period of time. This gives the most stable speed but will ignore some true speed changes.

Set the speed damping to the lowest value which gives a stable speed reading. Values of 1, 2, 3, 4 and 5 average readings over a time period of 6, 12, 18, 24 and 30 seconds respectively. To get the most accurate, stable trim speeds, you may need to increase the damping. To set speed damping:

1 Press ◔ + ☊ several times until the Speed Damping screen is displayed:

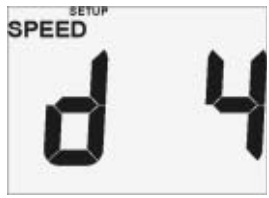

Damping equals 4

2 Press ⋀ or ⋁ to change the damping.
3 Press ☊.

3-6 Set speed resolution

This sets how speeds are displayed. It has two settings:

- **0.0** Displays speeds as 0.0 to 19.9, 20 up.
- **0.00** Displays speeds as 0.00 to 19.99, 20.0 to 29.9, 30 up:

To set the speed resolution:

1 Press ◔ + ☊ several times until the Speed Resolution screen is displayed:
2 Press ⋀ or ⋁ to change the resolution setting.

Value equals 0.0 or 0.00

3 Press ☊.

3-7 Calibrate speed

Calibration may be required, because different hull shapes have different water flow characteristics. Speed calibration can be done either by the speed or by the log, as described below. If speed readings are taken from a GPS receiver (see section 7), then you can not calibrate it.

Calibrate by speed

In this method, travel at a measured, constant speed. Use the speed displayed on a GPS receiver, follow another boat travelling at a known speed or make a timed run over a known distance.

Note that for accurate calibration:

- The speed from a GPS receiver should be above 5 knots.
- The speed from another paddlewheel transducer should be between 5 and 20 knots.
- Best results are achieved in calm conditions where there is minimal current (best at high or low tide).

Continue travelling at this measured, constant speed and calibrate the speed as follows:

Measured speed

1 Press + several times until the Speed Calibration screen is displayed (after this, it does not matter if the boat speed changes).

2 Press or to change the displayed speed to the measured boat speed.

3 Press .

Calibrate by log

In this method, travel a known distance in a straight line over a course. Best results are achieved in calm conditions where there is minimal current (best at high or low tide). Tidal effects may be reduced by making the trip twice, parallel to the current, once in each direction:

Distance travelled

1 At the start of the course, reset the trip log (see section 4-1). Travel in a straight line over the course, then repeat in the other direction.

2 At the end, note the trip log distance (see section 4).

3 Press + several times until the Speed Calibration by Log screen is displayed.

4 Press or to change the displayed distance travelled to the actual distance you travelled over the course.

5 Press .

4 Log and total log

The SPEED 3100 has two distance logs:

- **LOG**: Trip distance. The distance travelled since log was reset.
- **TOTAL LOG**: Total distance. The distance travelled since total log was reset:

Total log

The log units are NM, KM or M (miles) and correspond to the speed units, for example if you set the speed units to KPH then the log units are KM (see section 3-1).

4-1 Reset log

Resetting zeros the log (trip distance):

1 Press or until LOG is displayed.

2 Press + .

4-2 Reset total log

Resetting zeros the total log (total distance), as well as the log:

1 Press or until TOTAL LOG is displayed.

2 Hold + for five seconds.

5 Temperature

Temperature is measured by a sensor in the speed transducer.

5-1 Set temperature units

The units can be °C or °F:

- Press ⋁ or ⋀ until the temperature is displayed, then hold ⋀ until the units change.

5-2 Calibrate temperature

The unit is factory calibrated and should not normally need calibrating. To calibrate:

1 Measure the water temperature near the speed transducer.

2 Press ◔ + ⚲ several times until the Temperature Calibration screen is displayed:

Water temperature

3 Press ⋀ or ⋁ to change the temperature to the value measured in step 1 above.

4 Press ⚲.

6 Countdown timer

To go to timer mode, press ◔. To return to normal mode, press ◔ again.

You can adjust the countdown timer to between one and ten minutes, in increments of one minute. The factory default start time is 10 minutes. When the timer is counting down, TIMER flashes at the top of the screen and in timer mode the time to go is displayed in minutes and seconds:

Flashes

Timer counting down

The beeper sounds and any external beepers or lights operate:

- Four beeps at four minutes to go.
- Three beeps at three minutes.
- Two beeps at two minutes.
- One beep at one minute.
- Ten beeps at the end; the last beep is longer and marks the end of the countdown.

In each case, the end of the last beep marks the exact minute.

6-1 Start countdown timer

1 If you are not in timer mode, press ◔ to go to timer mode (to adjust the start time, see section 6-3).

2 Press ⋁. The timer displays On briefly and starts counting down from the start time.

6-2 Stop and reset countdown timer

1 If you are not in timer mode, press ◔ to go to timer mode.

2 Press ⚲ + ⋁. The timer stops and the time resets to the start time (see section 6-3).

6-3 Adjust start time

1 If you are not in timer mode, press ◔ to go to timer mode.

2 If the timer is counting down, press ⚲ + ⋁ to stop the timer.

3 Press ⋀ one or more times to set the start time in minutes. The timer does not start now (to start the timer, see section 6-1).

Timer set to 9 min

7 Systems of several instruments

Several NAVMAN instruments can be connected together to share data. There are two ways of connecting instruments together, NavBus or NMEA.

7-1 NavBus

NavBus is a NAVMAN proprietary system that allows systems of multiple instruments to be built using a single set of transducers. When instruments are connected by NavBus:

- If you change the units, alarms or calibration in one instrument, then the values will automatically change in all other instruments of the same type.
- Each instrument can be assigned to a group of instruments (see section 9-2, step 3). If you change the backlight in an instrument in group 1, 2, 3 or 4 then the backlight will automatically change in the other instruments in the same group. If you change the backlight in an instrument in group 0 then no other instruments are affected.
- If an alarm sounds, mute it by pressing on any instrument which can display that alarm.

NavBus and the SPEED 3100

- If the SPEED 3100 does not have a speed/ temperature transducer fitted then the unit will automatically take speed and temperature readings from another instrument, via NavBus, if the data is available. For more information, refer to the *NavBus Installation and Operation Manual*.
- If the boat has a GPS instrument connected to the instruments via NavBus then you can set up the SPEED 3100 to use this for speed readings instead of a speed transducer (see section 9-1 for wiring and section 9-2, step 2 for setup).

  ***Note*: The speed from a paddlewheel sensor is the speed that the boat is moving through the water. A speed from a GPS is the speed over the ground. If there is a current then these two speeds will be different.**
- If a transducer is not fitted to the unit and the corresponding external data is not available then the displayed value will be 0 (for example, when using a GPS input for speed and no speed/ temperature transducer is fitted to any instrument on the NavBus then temperature displays as 0).

7-2 NMEA

NMEA is an industry standard, but is not as flexible as NavBus as it requires dedicated connections between instruments. Speed, temperature and log data are output by the SPEED 3100 and can be read and displayed by the NAVMAN REPEAT 3100 or other NMEA instrument. The SPEED 3100 can also receive GPS speed data (NMEA RMC) from any compatible NMEA GPS instrument - GPS speed must be selected (see section 9-2, step 2).

8 SPEED 3100 hardware

8-1 What comes with your SPEED 3100

The SPEED 3100 comes in several configurations.

Standalone configuration

- SPEED 3100 unit with protective cover.
- Warranty card.
- Mounting template.
- This Installation and Operation manual.

In addition, the standalone configuration usually requires a speed/temperature transducer (see section 8-3).

Kit configuration

The SPEED 3100 is available in several kit configurations with different grades of through hull transducer, with:

- The parts for the standalone configuration, listed above.
- Through hull speed/temperature transducer
- Transducer Installation manual.

8-2 Other parts required

One or more 3100 series instruments will be connected to the boat 12 V power supply via:

- An accessory switch to turn the instruments on and off.
- A fuse: Use a 1 A fuse for between one and five instruments.

Optional external beepers or lights can be fitted. The SPEED 3100 output is switched to ground, 30 V DC and 250 mA maximum. If the beepers and lights require more than 250 mA, fit a relay.

For systems of several instruments, wiring and connectors are required (see section 7 or the *NavBus Installation and Operation manual*).

8-3 Transducers

The SPEED 3100 is usually used with a through hull speed/temperature transducer. However, the unit can take readings from another instrument, in which case it may not need a transducer (see section 7).

A through hull transducer generally gives the best performance and is the best choice for displacement hulls. It is mounted in a hole drilled through the bottom of the boat.

- A plastic through hull transducer is suitable for GRP or metal hulls. Plastic through hull transducers are not suitable for solid wood hulls. (Use NAVMAN's bronze transducers).
- A bronze transducer is suitable for wood or fibreglass hulls. Never install a bronze transducer in a metal hull, because it will cause electrolytic corrosion.

A range of NAVMAN through hull transducers are available, for more information, refer to the Transducer Installation manual or consult your NAVMAN dealer.

8-4 Accessories

These accessories are available from your NAVMAN dealer.

NavBus junction box (See section 7-1)

4 m (13 ft) speed transducer extension cable

Through hull speed transducer skin fitting

Through hull speed paddlewheel

9 Installation and setup

Correct installation is critical to the performance of the unit. It is vital to read this section of the manual and the documentation that comes with the other parts before starting installation.

The SPEED 3100 can:

- Drive external beepers or lights for the countdown timer.
- Send and receive data from other NAVMAN instruments connected via NavBus. Settings for alarms, units, calibration and backlighting are shared (see section 7-1).
- Send and receive NMEA data from other instruments (see section 7-2).

Warnings

The unit is waterproof from the front. Protect the rear of the unit from water, or else water might enter the breathing hole and damage the unit. The warranty does not cover damage caused by moisture or water entering the back of the unit.

Ensure that any holes that you cut will not weaken the boat's structure. If in doubt, consult a qualified boat builder.

The choice, location, angle and installation of the transducers is the most critical part of the installation. If they are not correct, the unit can not perform at its designed potential. If in doubt, consult your NAVMAN dealer. Plastic through hull transducers are usually unsuitable for wood hulls. If in doubt, consult a marine surveyor or marine engineer.

9-1 Installation

SPEED 3100 display unit

1 Choose a location for the display unit that is:
   - Easily seen and protected from damage.
   - At least 100 mm (4") from a compass and at least 500 mm (1.65 ft) from a radio or radar antenna.
   - Away from engines, fluorescent lights, and power inverters.
   - Accessable from behind; the minimum clearance required at the back is 50 mm (2") (see mounting diagram).
   - With the back of the unit protected from moisture.
2 The unit must mount on a flat panel which is less than 20 mm (0.75") thick. Stick the mounting template in place. Drill a 50 mm (2") fixing hole through the centre hole in the template. Note that the template allows space around the unit for the protective cover.
3 Remove the fixing nut from the back of the unit. Insert the stud at the back of the unit through the mounting hole. Hand tighten the fixing nut.

Transducer

1 If the SPEED 3100 does not come with a transducer, choose a suitable transducer (see section 8-3). If the SPEED 3100 is supplied with a transducer, see section 8-3 to ensure that it is suitable.
2 Choose a suitable location for the transducer and install it by following the instructions in the Transducer Installation manual.
3 Fit the cables between the transducer and the display unit:
   - Keep the cable away from other cables, engines, fluorescent lights, power inverters and radio or radar transmitters.
   - Ensure no connectors lay in the bilge.
   - If necessary, extend the cable by adding extension cables
   - Secure the cable at regular intervals.
4 Connect the transducer to the display unit connector.

Side view of display unit mounting

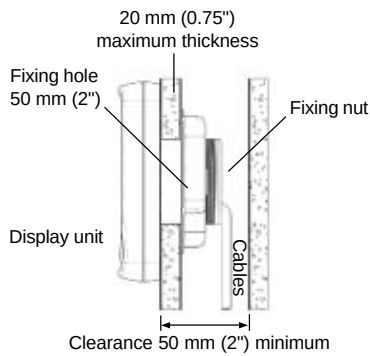

Power/data wiring

1 Wire the display unit power/data cable:

- The unit requires 12 V DC power. Fit a power switch and fuse to the power supply or power the unit from a fused auxiliary switch. The fuse should be 1 A for up to five instruments.
- If the external beepers and lights require more than 250 mA DC total, fit a relay.

A single unit can be wired as shown below:

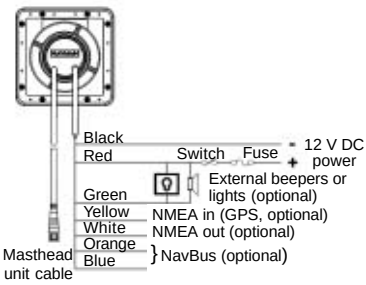

With several instruments, use the optional junction boxes to simplify wiring, as shown below:

Group 1

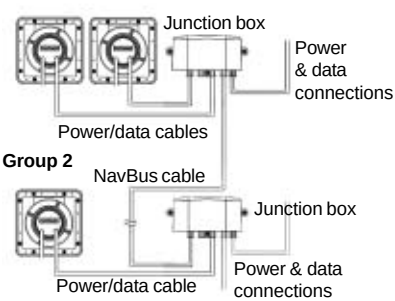

For information on how to connect NavBus and to use junction boxes, refer to the *NavBus Installation and Operation Manual*.

2 Tape or cover any unused wires or connectors to protect them from water and keep them from shorting together.

9-2 Set up

1 Take the boat for a trial run to check that all the instruments work correctly.

2 If the unit will take speed readings from a GPS receiver (rather than a speed transducer or an external speed input from an instrument with a speed transducer - see section 7):

i Press + several times until the Speed Mode screen is displayed:

ii Press or to change the mode to GPS (when using a speed transducer, the mode should be SEn).

iii Press .

3 If the unit is part of a system of 3100 series instruments connected by NavBus, set the backlight group number (see section 7-1):

i Press + several times until the Backlight Group screen is displayed:

Group 3

ii Press or to set the backlight group number.

iii Press .

4 Set:

- Speed and log units (see section 3-1).
- The speed resolution (see section 3-6).
- The temperature units (see section 5-1).

5 Calibrate if required:

- Speed (see section 3-7).
- Temperature (see section 5-2).

9-3 Resetting to factory defaults

All settings may be reset to the manufacturer's default settings (see right).

To reset to factory defaults:

1 Turn the power off.

2 Hold down 🔑 + V while you turn the power on and continue to hold the keys down for at least 5 seconds.

Speed units	**Knots**
Temperature units	**°C**
Speed resolution	**0.0**
Speed damping	**2**
Countdown timer start time	**10 min**
Distance logs	**0**
SIMULATE mode	**Off**
Backlight level	**0**
Backlight group	**1**

Appendix A - Specifications

Physical

- Case size 111 mm (4.4") square.
- LCD display 82 mm (3.2") wide, 61 mm (2.4") high; twisted nematic.
- LCD digits 38 mm (1.4") high.
- Four operator keys, laser etched.
- Backlighting for display and keys, amber, four levels and off.
- Operating temperature 0 to 50°C (32 to 122°F)
- Transducer cable length 8 or 9 metres (26.25 ft or 29.5 ft), depending on transducer.
- Power Cable length 1m (3.25 ft).

Electrical

- Power supply 10.5 to 16.5 V DC, 30 mA without backlighting, 100 mA with full backlighting and transducer.
- External beeper or light output, switched to ground, 30 V DC and 250 mA maximum.

Speed

- Displays current speed, average speed, maximum speed, trim speed.
- Range 0 to 50 knots (0 to 58 mph, 0 to 93 km/h).
- Display resolution either 0.0 to 19.9, 20 up or 0.00 to 19.99, 20.0 to 29.9, 30 up.
- Trim speed displays ± .00 to .99, 1.0 to 9.9, 10 up.
- Adjustable damping for speed and trim speed; values of 1, 2, 3, 4 & 5 average readings over a time period of 6, 12, 18, 24 & 30 seconds respectively.

Log

- Displays trip log and total log.
- Range 0 to 1999 km, miles or nautical miles.
- Displays 0.00 to 19.99, 20.0 to 199.9, 200 up.

Temperature

- Range 0 to 37.7°C (32 to 99.9°F); typical accuracy < 2°C (32.5°F).
- Resolution 0.1 degree.

Countdown timer

- Can be set to between 1 and 10 minutes, in increments of 1 minute.
- Counts down in minutes and seconds.

Calibration

- Speed and temperature can be calibrated.

Interfaces

- NavBus connection to other NAVMAN instruments.
- NMEA 0183 outputs: MTW, PTTKV, VHW, VLW; input RMC.

Standards compliance

- **EMC compliance**
  USA (FCC): Part 15 Class B.
  Europe (CE): EN50081-1, EN50082-1
  New Zealand and Australia (C Tick): AS-NZS 3548.
- Environment: IP66 from front when correctly mounted.

Power/data cable wires

Wire	Signal
Red	Power positive, 12 V DC, 100 mA maximum
Black	Power negative, NMEA common
Green	External beeper or light out, switched to ground, 30 V DC and 250 mA max.
Orange	NavBus +
Blue	NavBus -
White	NMEA out
Yellow	NMEA in

Appendix B - Troubleshooting

This troubleshooting guide assumes that you have read and understood this manual.

It is possible in many cases to solve difficulties without having to send the unit back to the manufacturer for repair. Please follow this troubleshooting section before contacting the nearest NAVMAN dealer.

There are no user serviceable parts. Specialized methods and testing equipment are required to ensure that the unit is reassembled correctly and is waterproof. Repairs to the unit must only be carried out by a service centre approved by Navman NZ Limited. Users who service the unit themselves will void the warranty.

More information can be found on our Website: www.navman.com.

1 Unit will not turn on:

a Fuse blown or circuit breaker tripped.

b Battery voltage is outside the range 10.5 to 16.5 V DC.

c Power/data cable damaged.

2 Speed reading wrong or erratic:

a Calibration is incorrect (see section 3-7).

b Speed transducer cable unplugged or damaged.

c Speed/temperature transducer fouled or damaged. Check paddlewheel is aligned fore and aft in the fitting. Remove paddlewheel from fitting, check for fouling or damage. Spin paddlewheel by hand, check for a speed reading.

d Speed transducer installed incorrectly or transducer does not have a smooth flow of clear water over it. Review installation.

e Interference from electrical noise. Review installation.

3 Temperature reading wrong:

a Calibration is incorrect (see section 5-2).

b Speed/temperature transducer cable damaged.

4 The word SIMULATE flashes at top, left of screen, values displayed are unexpected:

a Unit is in simulate mode (see section 2-4).

5 The display fogs:

a Moist air has entered the breathing tube at the rear of the unit. Air the boat or run unit with backlight fully on.

b Water has entered the breathing tube. Return unit for service.

NORTH AMERICA

NAVMAN USA INC.
18 Pine St. Ext.
Nashua, NH 03060.
Ph: +1 603 577 9600
Fax: +1 603 577 4577
e-mail: sales@navmanusa.com

OCEANIA

New Zealand
Absolute Marine Ltd.
Unit B, 138 Harris Road,
East Tamaki, Auckland.
Ph: +64 9 273 9273
Fax: +64 9 273 9099
e-mail:
navman@absolutemarine.co.nz

Australia
NAVMAN AUSTRALIA PTY Limited
Unit 6 / 5-13 Parsons St,
Rozelle, NSW 2039, Australia.
Ph: +61 2 9818 8382
Fax: +61 2 9818 8386
e-mail: sales@navman.com.au

SOUTH AMERICA

Argentina
HERBY Marina S.A.
Costanera UNO,
Av Pte Castillo Calle 13
1425 Buenos Aires, Argentina.
Ph: +54 11 4312 4545
Fax: +54 11 4312 5258
e-mail:
herbymarina@ciudad.com.ar

Brazil
REALMARINE
Estrada do Joa 3862,
CEP2611-020,
Barra da Tijuca, Rio de Janeiro, Brasil.
Ph: +55 21 2483 9700
Fax: +55 21 2495 6823
e-mail:
vendas@marinedepot.com.br

Equinautic Com Imp Exp de Equip Nauticos Ltda.
Av. Diario de Noticias 1997 CEP 90810-080, Bairro Cristal, Porto Alegre - RS, Brasil.
Ph: +55 51 3242 9972
Fax: +55 51 3241 1134
e-mail:
equinautic@equinautic.com.br

ASIA

China
Peaceful Marine Electronics Co. Ltd.
Hong Kong, Guangzhou, Shanghai, Qindao, Dalian.
E210, Huang Hua Gang Ke Mao Street, 81 Xian Lie Zhong Road, 510070 Guangzhou, China.
Ph: +86 20 3869 8784
Fax: +86 20 3869 8780
e-mail:
sales@peaceful-marine.com
Website:
www.peaceful-marine.com

Korea
Kumho Marine Technology Co. Ltd.
604-816, 3F, 1117-34,
Koejung4-Dong, Saha-ku
Pusan, Korea
Ph: +82 51 293 8589
Fax: +82 51 294 0341
e-mail: info@kumhomarine.com
Website:
www.kumhomarine.com

Malaysia
Advanced Equipment Co.
43A, Jalan Jejaka 2, Taman Maluri, Cheras 55100, Kuala Lumpur.
Ph: +60 3 9285 8062
Fax: +60 3 9285 0162
e-mail: ocs@pc.jaring.my

Singapore
RIQ PTE Ltd.
Blk 3007, Ubi Road 1,
#02-440, Singapore 408701
Ph: +65 6741 3723
Fax: +65 6741 3746
HP: +65 9679 5903
e-mail: riq@postone.com

Thailand
Thong Electronics (Thailand) Company Ltd.
923/588 Thaprong Road, Mahachai,
Muang, Samutsakhon 74000, Thailand.
Ph: +66 34 411 919
Fax: +66 34 422 919
e-mail: thonge@cscoms.com

Vietnam
Haidang Co. Ltd.
16A/A1E, Ba thang hai St.
District 10, Hochiminh City.
Ph: +84 8 86321 59
Fax: +84 8 86321 59
e-mail:
sales@haidangvn.com
Website: www.haidangvn.com

MIDDLE EAST

Lebanon and Syria
Letro, Balco Stores,
Moutran Street, Tripoli
VIA Beirut.
Ph: +961 6 624512
Fax: +961 6 628211
e-mail: balco@cyberia.net.lb

United Arab Emirates
Kuwait, Oman & Saudi Arabia
AMIT, opp Creak Rd.
Baniyas Road, Dubai.
Ph: +971 4 229 1195
Fax: +971 4 229 1198
e-mail: mksq99@email.com

AFRICA

South Africa
Pertec (Pty) Ltd Coastal,
Division No.16 Paarden Eiland Rd.
Paarden Eiland, 7405
Postal Address: PO Box 527,
Paarden Eiland 7420
Cape Town, South Africa.
Ph: +27 21 511 5055
Fax: +27 21 511 5022
e-mail: info@kfa.co.za

EUROPE

France, Belgium and Switzerland
PLASTIMO INTERNATIONAL
15, rue Ingénieur Verrière,
BP435,
56325 Lorient Cedex.
Ph: +33 2 97 87 36 36
Fax: +33 2 97 87 36 49
e-mail: plastimo@plastimo.fr
Website: www.plastimo.fr

Germany
PLASTIMO DEUTSCHLAND
15, rue Ingénieur Verrière
BP435
56325 Lorient Cedex.
Ph: +49 6105 92 10 09
+49 6105 92 10 10
+49 6105 92 10 12
Fax: +49 6105 92 10 11
e-mail:
plastimo.international@plastimo.fr
Website: www.plastimo.de

Italy
PLASTIMO ITALIA
Nuova Rade spa, Via del Pontasso 5
I-16015 CASELLA SCRIVIA (GE).
Ph: +39 1096 8011
Fax: +39 1096 8015
e-mail: info@nuovarade.com
Website: www.plastimo.it

Holland
PLASTIMO HOLLAND BV.
Industrieweg 4,
2871 JE SCHOONHOVEN.
Ph: +31 182 320 522
Fax: +31 182 320 519
e-mail: info@plastimo.nl
Website: www.plastimo.nl

United Kingdom
PLASTIMO Mfg. UK Ltd.
School Lane - Chandlers Ford Industrial Estate,
EASTLEIGH - HANTS S053 ADG.
Ph: +44 23 8026 3311
Fax: +44 23 8026 6328
e-mail: sales@plastimo.co.uk
Website: www.plastimo.co.uk

Sweden, Denmark or Finland
PLASTIMO NORDIC AB.
Box 28 - Lundenvägen 2,
47321 HENAN.
Ph: +46 304 360 60
Fax: +46 304 307 43
e-mail: info@plastimo.se
Website: www.plastimo.se

Spain
PLASTIMO ESPAÑA, S.A.
Avenida Narcís Monturiol, 17
08339 VILASSAR DE DALT, (Barcelona).
Ph: +34 93 750 75 04
Fax: +34 93 750 75 34
e-mail: plastimo@plastimo.es
Website: www.plastimo.es

Other countries in Europe
PLASTIMO INTERNATIONAL
15, rue Ingénieur Verrière
BP435
56325 Lorient Cedex, France.
Ph: +33 2 97 87 36 59
Fax: +33 2 97 87 36 29
e-mail:
plastimo.international@plastimo.fr
Website: www.plastimo.com

REST OF WORLD / MANUFACTURERS

NAVMAN NZ Limited
13-17 Kawana St. Northcote.
P.O. Box 68 155 Newton,
Auckland, New Zealand.
Ph: +64 9 481 0500
Fax: +64 9 480 3176
e-mail:
marine.sales@navman.com
Website:
www.navman.com

Made in New Zealand
MN000133 1951319B

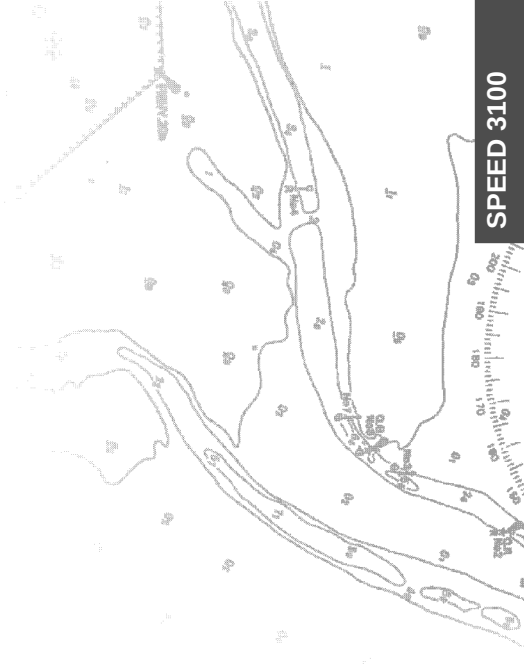

SPEED 3100

NAVMAN

Lon 174° 44.535'E

Lat 36° 48.404'S